preliminary product specification

AHS460-WR

High Efficiency Full-Range Steerable Horn

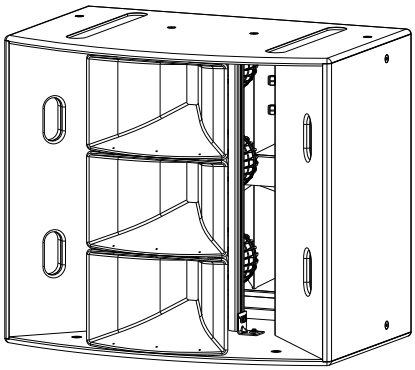

Overview

The 3-way AHS460 steerable array loudspeaker represents a leap forward in solving design challenges when installing systems in sub-optimal conditions and spaces. Harnessing the power of Fulcrum's TQ processing combined with proprietary beam-forming algorithms, the AHS460 provides superior pattern control and precisely-defined coverage for long-range applications. The AHS line is particularly potent when used in scoreboard systems in large format sports stadia, where architecture and scoreboard designs present challenges that are difficult for conventional line array loudspeakers to overcome.

Its unique **Compression Head**™ horn architecture provides exceptional low frequency loading to its four 10 inch low frequency drivers, while four **Oculus**™ phase plugs extends the 10s' high frequency response to smoothly mesh with four state-of-the-art coaxial mid/high frequency compression drivers. The loudspeaker is driven by 5 channels of processing and amplification, which provides sufficient granularity for a range of steering settings. The required digital signal processing must provide at least 1024-point FIR filters at 48 kHz, for each loudspeaker sub-section. Please consult with Fulcrum tech support for recommended platforms.

The AHS460 may be combined with additional AHS460 or AHS440 loudspeakers to extend coverage and output. Arrays of AHS460 and AHS440 may be assembled in up to eight-high columns to meet the requirements of large venues. Its **Compression Head**™ horn architecture provides easy access to the drivers, so the AHS460 can be conveniently serviced while in place.

Performance Specifications[1]

Operating Mode

Five amplifier channels w/FIR DSP

Operating Range [2]

60 Hz to 16 kHz

Nominal Beamwidth

Horizontal: 60°
Vertical: Defined by beam-forming parameters
Vertical Steering: +10° to -30°

Transducers

LF: 4x 10.0" neodymium magnet cone driver, 2x 3.5" dual-gap voice coils
MF/HF: 3x neodymium coaxial ring radiator, 4.0" titanium mid frequency diaphragm, 2.5" high frequency diaphragm

Power Handling @ Nominal Impedance [3]

LF: 2x 113 V (2x 1600 W @ 8 Ω)
MF/HF: 3x 49 V (3x 300 W @ 8 Ω)

Nominal Sensitivity @ Input Voltage [4] (whole space)

LF: 110 dB @ 2.00 V (2x 8 Ω loads)
MF/HF: 115 dB @ 2.67 V (3x 8 Ω loads)

Nominal Maximum SPL (peak / continuous)

LF: 151 dB / 145 dB
MF/HF: 151 dB / 145 dB

Equalized Sensitivity @ Input Voltage [5]

110 dB @ 2.00 V

Equalized Maximum SPL (peak / continuous) [6]

152 dB / 146 dB

Recommended Power Amplifiers

LF: 2x 1600 W to 3200 W @ 8 Ω
HF: 3x 300 W to 600 W @ 8 Ω

Physical Specifications

Connections

LF: (1) SEOOW 14 AWG 4 conductor jacketed cable, 25 ft / 7.6 m
HF: (1) SEOOW 14 AWG 6 conductor jacketed cable, 25 ft / 7.6 m
Custom lengths up to 25 ft available upon request

Mounting / Suspension Points

(8) M10 x 1.5 eye bolt angle points
For use with 3rd party custom rigging

Finish/Construction

Black painted fiberglass reinforced polyurethane (FRP) enclosure w/ weather-resistant hardware

Dimensions (H x W x D) / Weight

31.4 x 35.0 x 28.8 in / 798 x 889 x 732 mm
220 lb / 110 kg